- Quality
- Value
- Service

Tech Reference

Recommended Products
Spec. Check List
Barrier Free Guidelines

Flip Up Shelf

Code 955: Stainless steel type 304 no. 4 finish

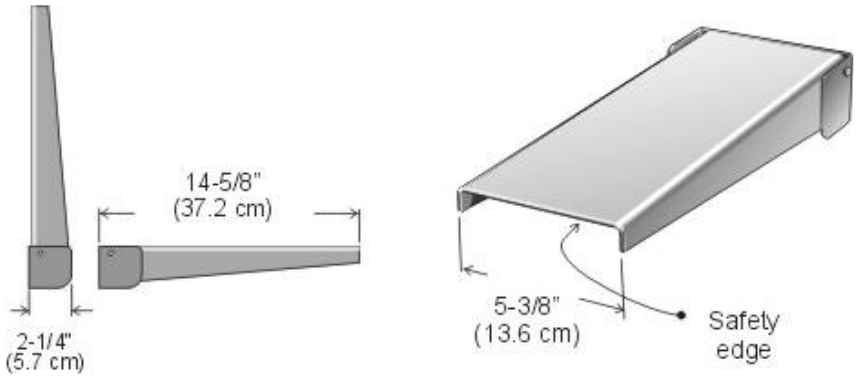

Specifications:

All stainless steel construction 18 ga. type 304 no. 4 finish. Shelf is spring loaded which will return to upright position when load is removed. Mounting bracket fabricated of 18 ga. ss type 304 no. 4 finish.
Shipping weight: 3 lbs. (2 kg) per unit
Installation: Secure to wall using mounting holes and screws provided. For barrier free mounting insure that top of unit does not exceed 48" (120 cm) above floor level.

Description and specifications applicable on date issued. Frost reserves the right to make improvements or changes without notice.